CYCLONE TESTING STATION

CYCLONE TESTING STATION

PRACTICAL BRICKWORK AND MASONRY

TECHNICAL REPORT NO. 9

Department of Civil and Systems Engineering,

JAMES COOK UNIVERSITY OF NORTH QUEENSLAND.

James Cook University of North Queensland 1981

ISSN 0158 - 8338

ISBN 0 85443 048 5

Tapiolas, W.A (Wilfred A.), 1945-.

ISBN 0 86443 048 5.

This Report is a reprint of a paper presented by the author as part of the Cyclone Building Construction Seminar organized during November 1980

1. INTRODUCTION

The ideal foundation is one of compacted sand, rock, or soil contain-

Because of the very competitive nature of domestic construction, builders will not adopt a conservative design of their own accord,

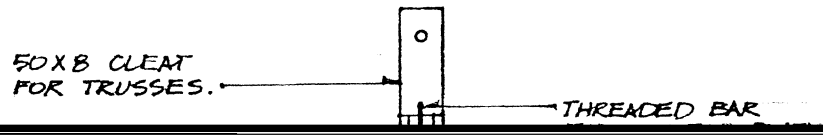
50X8 CLEAT
FOR TRUSSES.
THREADED BAR

TABLE 1

VERTICAL REINFORCEMENT

Terrain	Wall	Reinforcing

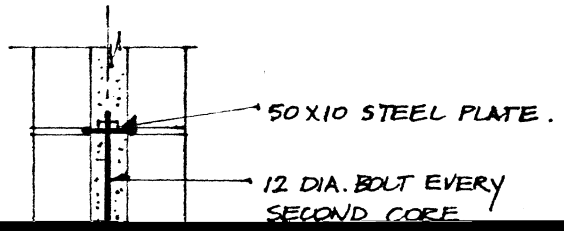

FIG. 7.

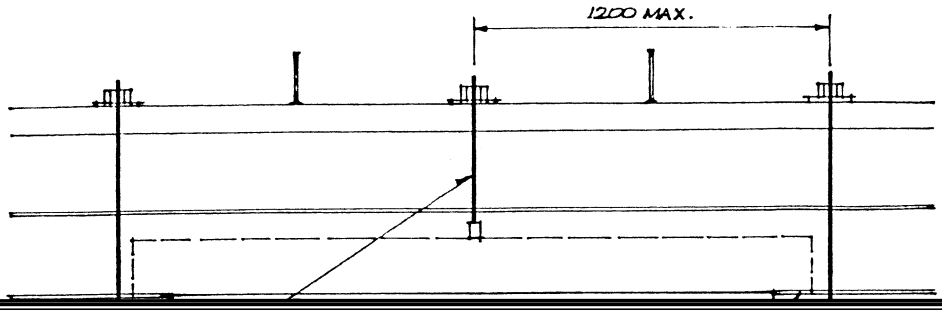
1200 MAX.

The concrete masonry industry has responded by providing detailed

The most favoured method is the use of a 30 mm x 6 mm plate with 16 mm hole top and bottom. This plate is then threaded over one of

Where damp course has been specified, the use of bituminous coated

DOO EXTERNAL WALL.

GID STARTER BAR

5.2 The Blockwork

The masonry external walls have been laid in a recess set down 100 mm to the slab perimeter (see figure 16). Clean out blocks are used at

These features are:-

(i) the use of a recess at the outer edge of the floor slab

(ii) the use of clean out blocks to all vertically reinforced cores

and (iii) the provision of a hard beam to the course below the sill to